REVISIONS					
ECO	ZONE	REV	DESCRIPTION	DATE	APPROVED
		A	INITIAL RELEASE	07/31/01	Chen

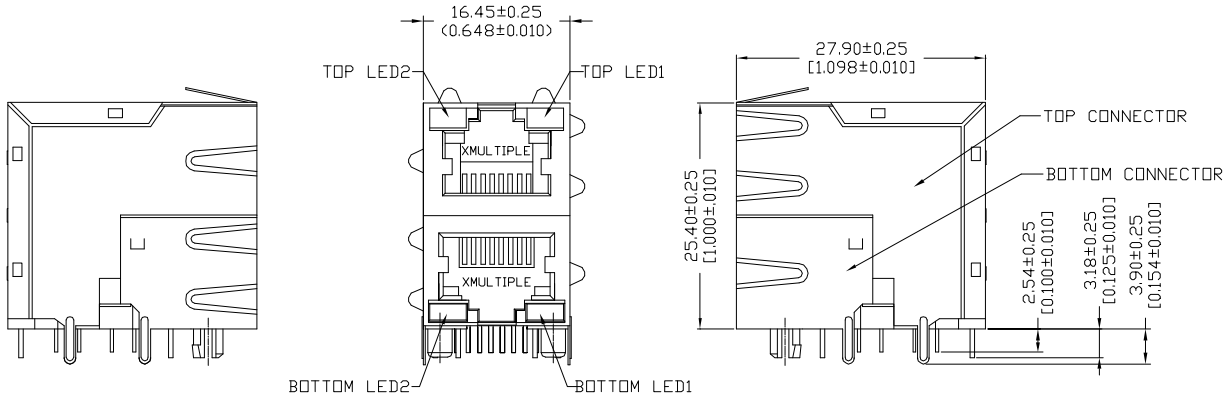

FRONT VIEW

SIDE VIEW

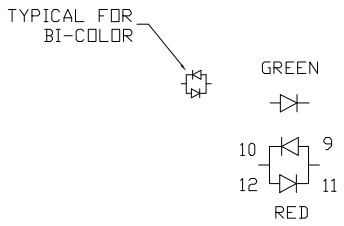

BI-COLOR LED DETAIL
(RED, RED/YELLOW, GREEN/ORANGE
LED'S ARE ALSO AVAILABLE)

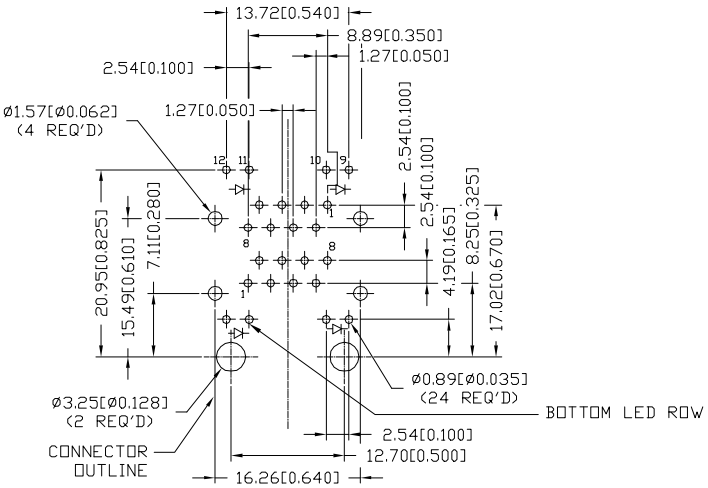

PCB LAYOUT
TOLERANCE
.XX±0.05[0.002]

SUGGESTED PCB LAYOUT

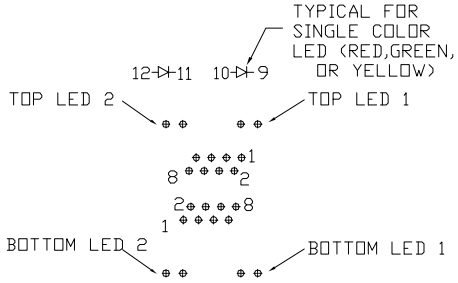

LED SCHEMATIC

LED Color Options Table

LED Color Options		LED DASH OPTION
Position 2(Left)	Position 1(Right)	
No LED	No LED	0
Yellow	Green	1
No LED	Green	2
Yellow	No LED	3
Green	Yellow	4
Green	Green	5
Yellow	Yellow	6
Orange/Green	Orange/Green	7
Yellow/Green	Yellow/Green	8
Orange/Green	Yellow	9

1. MATERIALS:
   HOUSING: HIGH TEMP. THERMOPLASTIC, BLACK, UL 94V-0
   CONTACTS: 0.014 INCHES (0.35 MINIMETERS) THICK PHOSPHOR BRONZE PLATED WITH
   150 MICROINCHES(3.81 MICROMETERS) MINIMUM THICK TIN LEAD IN SOLDER AREA.
   15 MICROINCHES (0.38 MICROMETERS) MINIMUM GOLD IN LOCALIZED PLATE AREA.
   ENTIRE CONTACTS PLATED WITH 50 MICROINCHES (1.27 MICROMETERS) MINIMUM THICK NICKEL.
   SHIELDED: 0.0098 INCHES(0.25 MINIMETERS) THICK COPPER ZINC ALLOY PLATED WITH
   30 MICROINCHES (0.762 MICROMETERS) MINIMUM THICK NICKEL
2. JACK CAVITY CONFORMS TO FCC RULES AND REGULATIONS PART 68, SUBPART F
3. PART NUMBER: XRJD-S-21-8-8-X
   REFER TO LED OPTIONS TABLE FOR ORDERING CODES

NOTES:

UNLESS OTHERWISE SPECIFIED
UNSPECIFIED TOLERANCE: .XX ± 0.25[0.010]
.X ± 0.30[0.012]

XMULTIPLE — CONNECTING THE INFORMATION AGE

XMULTIPLE ASIA
11F-1,No. 70, Fu-Hsing N. Road
Taipei, Taiwan, R.O.C.

XMULTIPLE USA
3565 Old Conejo Road
Newbury Park, CA 91320

THIS DRAWING IS A CONTROLLED DOCUMENT.

TITEL: Stacked RJ45, Connectors, W/LED,8P,8C, Shielded, Thru Hole, 2 Piece Structure

PART NO: XRJD-S-21-8-8-X

DIMENSIONS	SHEET	REV
[mm]inch	1 of 1	A

G/NO:
DWG NO: PDDS24-XRJD21
DRAWN: VIQ
CHKD: C. TSAI
DATE: 10/06/01