REV	DESCRIPTION	DATE
0	????	060912

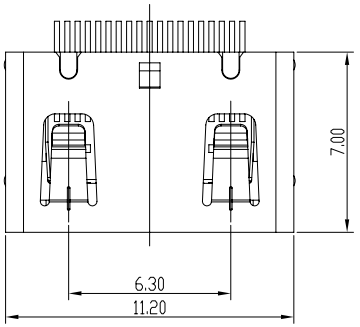

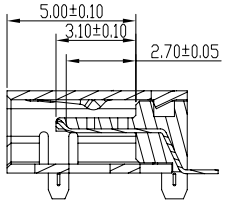

SECTION A-A

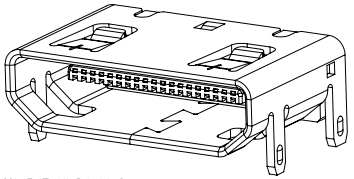

NOTES:
1.MATERIAL:
HOUSING:THERMOPLASTIC, HIGH TEMP, 30% G/F UL94 V-0
COLOR:BLACK
CONTACT:BRASS
SHELL:BRASS
2.FINISH:
CONTACT: GOLD/TIN PLATING ON CONTACT AREA
100u" MIN.TIN PLATING ON SOLDERTAILS
50u" MIN.NICKEL UNDERPLATING OVER ALL

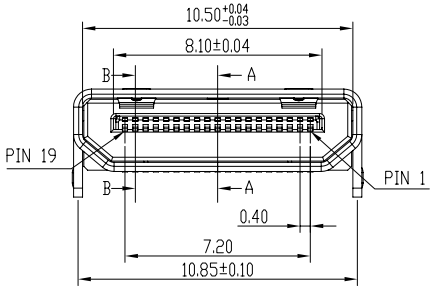

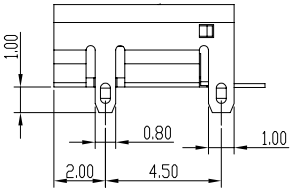

Ordering Information

HI1C19 - C X 85 X

Color/Material:
C=Black/LCP
...

Contact Area Plating
5:15？" Gold/LEAD-FREE(100%)TIN
6:30？" Gold/LEAD-FREE(100%)TIN
7:Gold Flash/LEAD-FREE(100%)TIN
...

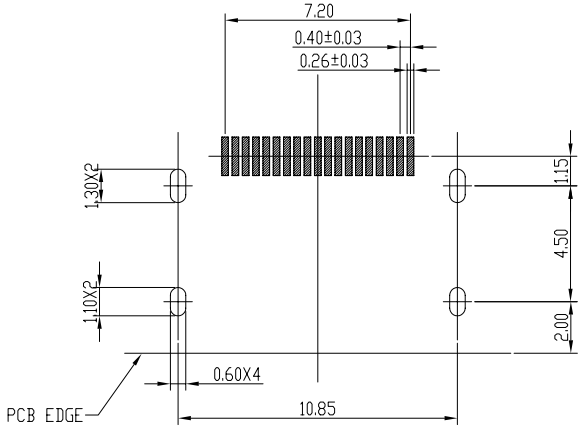

RECOMMEND P.C.B LAYOUT
TOLERANCE ±0.05

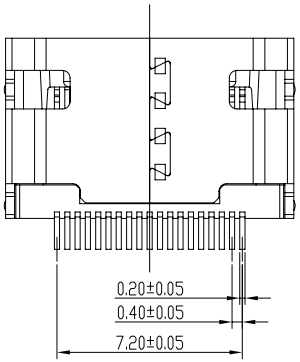

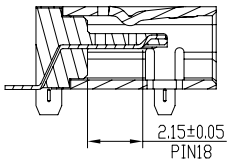

SECTION B-B

QUALITY SYMBOLS	GENERAL TOLERANCES (UNLESS SPECIFIED)				SCALE: N/A	NUMBER:	E-GREEN ENTERPRISE CO., LTD.
		MM		INCH	MATERAIL:	HRC:	
▼ ±0	.X	±0.38	.X	±----	DRAWN BY HUHUA	DATE 060912	TITLE: HDMI C TYPE PITCH=0.4 19P
	.XX	±0.25	.XX	±----	CHECKED BY	DATE	THIRD ANGLE PROJECTION / REVISE ON CAD ONLY
	.XXX	±0.13	.XXX	±----	APPROVED BY	DATE	PART NO. HI1C19-CX85X / DWG NO. HI-1085 / SHEET NO. 1/1
	ANGULAR ±3°						
C ±0	DRAFT WHERE APPLICABLE MUST REMAIN WITHIN DIMENSIONS						A4