REV	DESCRIPTION	APPR	CHECK	DRAW	DATA
0	????			JANET	040719

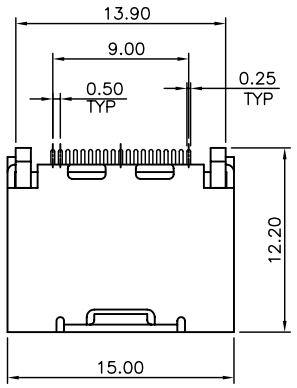

NOTES:
1.MATERIAL:
HOUSING:THERMOPLASTIC WITH 30% G/F, UL 94V-0
COLOR:BLACK
CONTACT:PHOSPHOR BRONZE C5191-H, T=0.25mm
SHELL:PHOSPHOR BRONZE(C5191-RH),T=0.50mm
2.FINISH:
CONTACT:15u" GOLD/TIN PLATING ON CONTACT AREA
100u" MIN.TIN PLATING ON SOLDERTAILS
50u" MIN.NICKEL UNDERPLATING OVER ALL
SHELL:50u" MIN.NICKEL UNDERPLATING OVER ALL

Ordering Information

HI 1 C 19 - C X 08 X

COLOR/MATERIAL:
C=BLACK/LCP
...

Contact Area Plating
5:15? " Gold/LEAD-FREE(100%)TIN
6:30? " Gold/LEAD-FREE(100%)TIN
7:Gold Flash/LEAD-FREE(100%)TIN
...

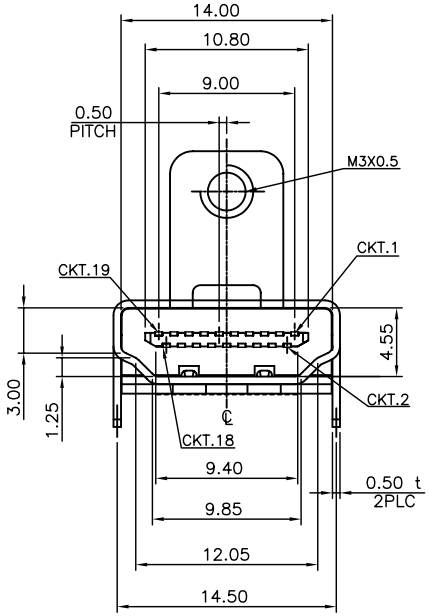

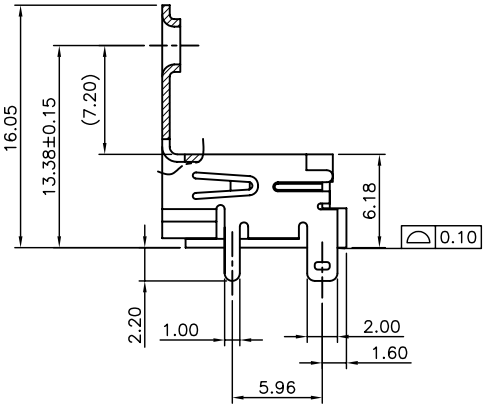

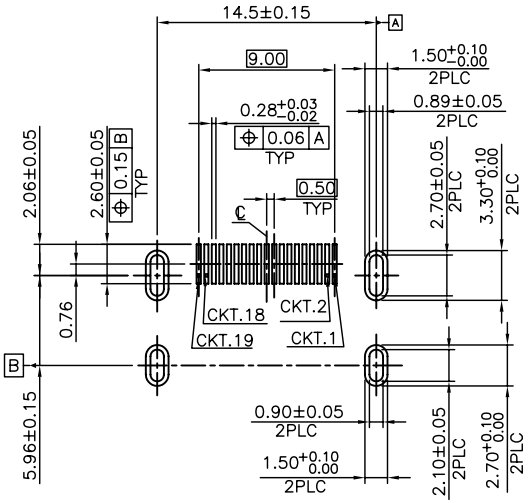

RECOMMENDED P.C.B.PATTERN LAYOUT (T=1.6±0.15)

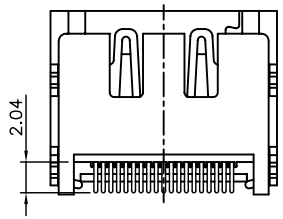

QUALITY SYMBOLS	GENERAL TOLERANCES (UNLESS SPECIFIED)			
		MM		INCH
▼ "0	.X	±0.38	.X	±---
	.XX	±0.25	.XX	±---
	.XXX	±0.13	.XXX	±---
	ANGULAR ±3°			
C "0	DRAFT WHERE APPLICABLE MUST REMAIN WITHIN DIMENSIONS			

SCALE: 2.5:1	NUMBER:	E-GREEN ENTERPRISE CO., LTD.
MATERAIL:	HRC:	TITLE: HDMI RIGHT ANGLE HEADER 19PIN SMT TYPE WITH FLANGE
DRAWN BY JANET	DATE 050525	
CHECKED BY ROCKY	DATE 050525	THIRD ANGLE PROJECTION / REVISE ON CAD ONLY
APPROVED BY	DATE	PART NO. HI1C19-CX08X / DWG NO. HI-1008 / SHEET NO. 1/1
		A4