REV	DESCRIPTION	APPR	CHECK	DRAW	DATE
0	????			JANET	051006

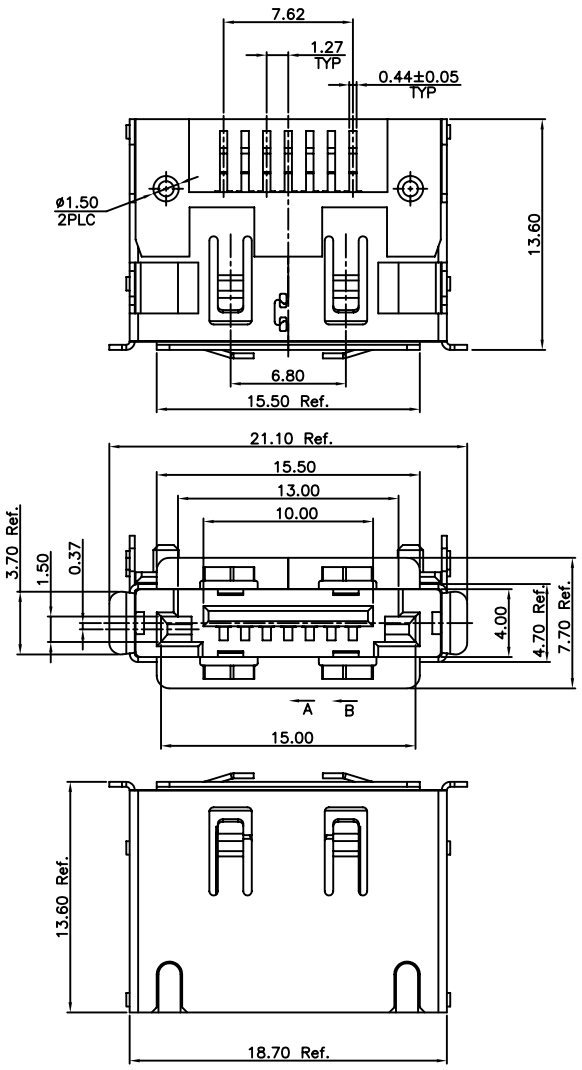

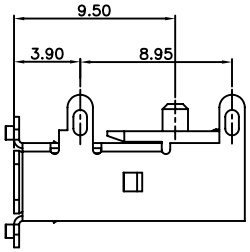

NOTES:
1.MATERIAL:
HOUSING:THERMOPLASTIC, HIGH TEMP, 30% G/F UL94 V-0
COLOR:BLACK
CONTACT:BRASS
SHELL:BRASS
2.FINISH:
CONTACT:15u" GOLD/TIN PLATING ON CONTACT AREA
100u" MIN.LEAD-FREE (100%) TIN PLATING ON SOLDERTAILS
50u" MIN.NICKEL UNDERPLATING OVER ALL
SHELL:50u" MIN.NICKEL UNDERPLATING OVER ALL

Ordering Information

SA 2 C 07 – C X 323 X A

Contact Area Plating
5:15? " Gold/LEAD-FREE(100%)TIN
6:30? " Gold/LEAD-FREE(100%)TIN
7:Gold Flash/LEAD-FREE(100%)TIN
...

Color/Material:
C=Black/LCP
...

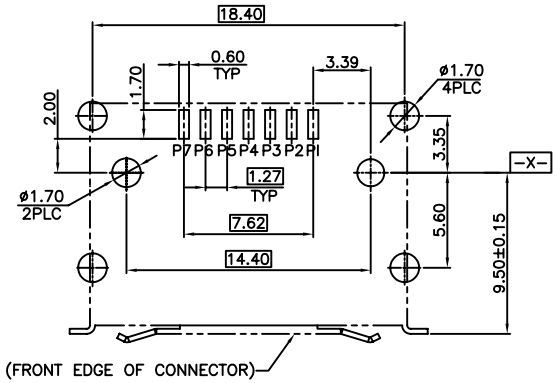

RECOMMEND P.C.BOARD MOUNTING DIMENSIONS t=1.60mm
PCB TOLERANCE:±0.05

QUALITY SYMBOLS	GENERAL TOLERANCES (UNLESS SPECIFIED)				
		MM		INCH	
▼ "0	.X	±0.38	.X	±---	
	.XX	±0.25	.XX	±---	
	.XXX	±0.13	.XXX	±---	
	ANGULAR ±0.5°				
▽C "0	DRAFT WHERE APPLICABLE MUST REMAIN WITHIN DIMENSIONS				

SCALE:	NUMBER:	E-GREEN ENTERPRISE CO., LTD.
MATERAIL:	HRC:	
DRAWN BY JANET	DATE 051006	TITLE: E SATA 7P?? SMT? TYPE1???
CHECKED BY	DATE	THIRD ANGLE PROJECTION / REVISE ON CAD ONLY
APPROVED BY	DATE	PART NO. SA2C07-CX323XA / DWG NO. SATA-1323C2A / SHEET NO. 1/1
		A4