REV	DESCRIPTION	APPR	CHECK	DRAW	DATE
0	????		ERIC	JANET	050505

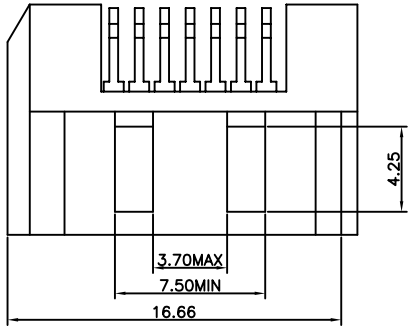

Ordering Information

SA 1 C 07 – C X 266 X A

Contact Area Plating
5:15? " Gold/LEAD–FREE(100%)TIN
6:30? " Gold/LEAD–FREE(100%)TIN
7:Gold Flash/LEAD–FREE(100%)TIN
...

Color/Material:
A=Black/PBT
B=Blue/NY 6T
(Color No.:293C)
C=Black/LCP
T=Orange/NY6T
(Color No.:159C)
B2=Blue/PBT
(Color No.:293C)
B3=Yellow/PBT
(Color No.:106C)
...

NOTES:
1.MATERIAL:
HOUSING:THERMOPLASTIC WITH 30% G/F, UL 94V–0
COLOR:BLACK
CONTACT:BRASS C2680R EH,T=0.25mm
BOARD LOCK:BRASS C2680R H,T=0.30mm
2.FINISH:
CONTACT:15u" GOLD/TIN PLATING ON CONTACT AREA
100u" MIN. TIN–LEAD PLATING ON SOLDERTAILS
50u" MIN.NICKEL UNDERPLATING OVER ALL
BOARD LOCK:100u" MIN. TIN–LEAD PLATING ON SOLDERTAILS
50u" MIN.NICKEL UNDERPLATING OVER ALL

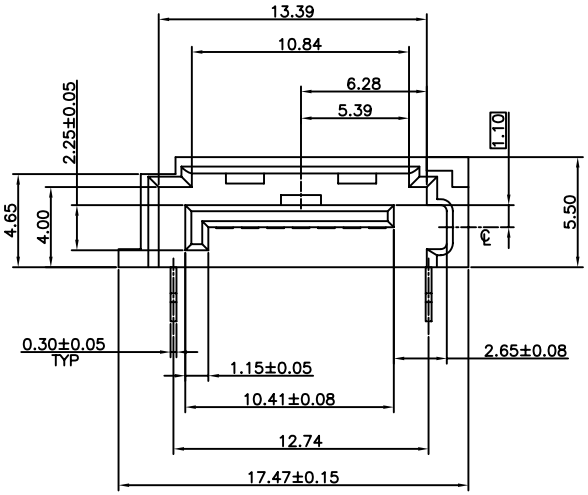

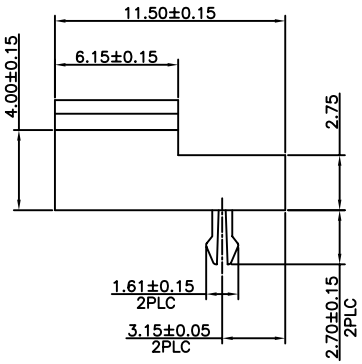

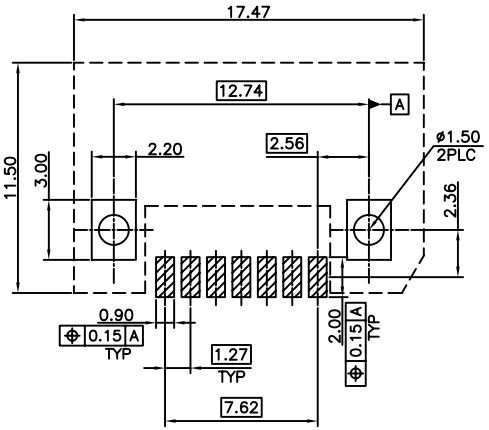

RECOMMEND PCB LAYOUT
PCB TOLERANCE:±0.05

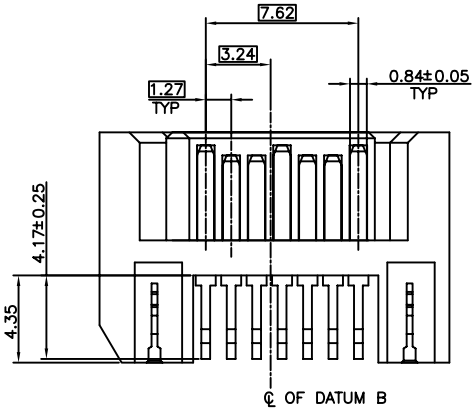

QUALITY SYMBOLS	GENERAL TOLERANCES (UNLESS SPECIFIED)			
		MM		INCH
▼ "0	.X	±0.38	.X	±---
	.XX	±0.25	.XX	±---
	.XXX	±0.13	.XXX	±---
	ANGULAR ±3°			
(C) "0	DRAFT WHERE APPLICABLE MUST REMAIN WITHIN DIMENSIONS			

SCALE: 4:1	NUMBER:
MATERAIL:	HRC:
DRAWN BY JANET	DATE 050505
CHECKED BY JAMES	DATE 050505
APPROVED BY	DATE

E–GREEN

TITLE: SATA 7P????? SMT?

THIRD ANGLE PROJECTION | REVISE ON CAD ONLY

PART NO.	DWG NO.	SHEET NO.
SA1C07–CX266XA	SATA–1266C2A	1/1

A4