REV	DESCRIPTION	APPR	CHECK	DRAW
0	原始圖檔		ERIC	JANET

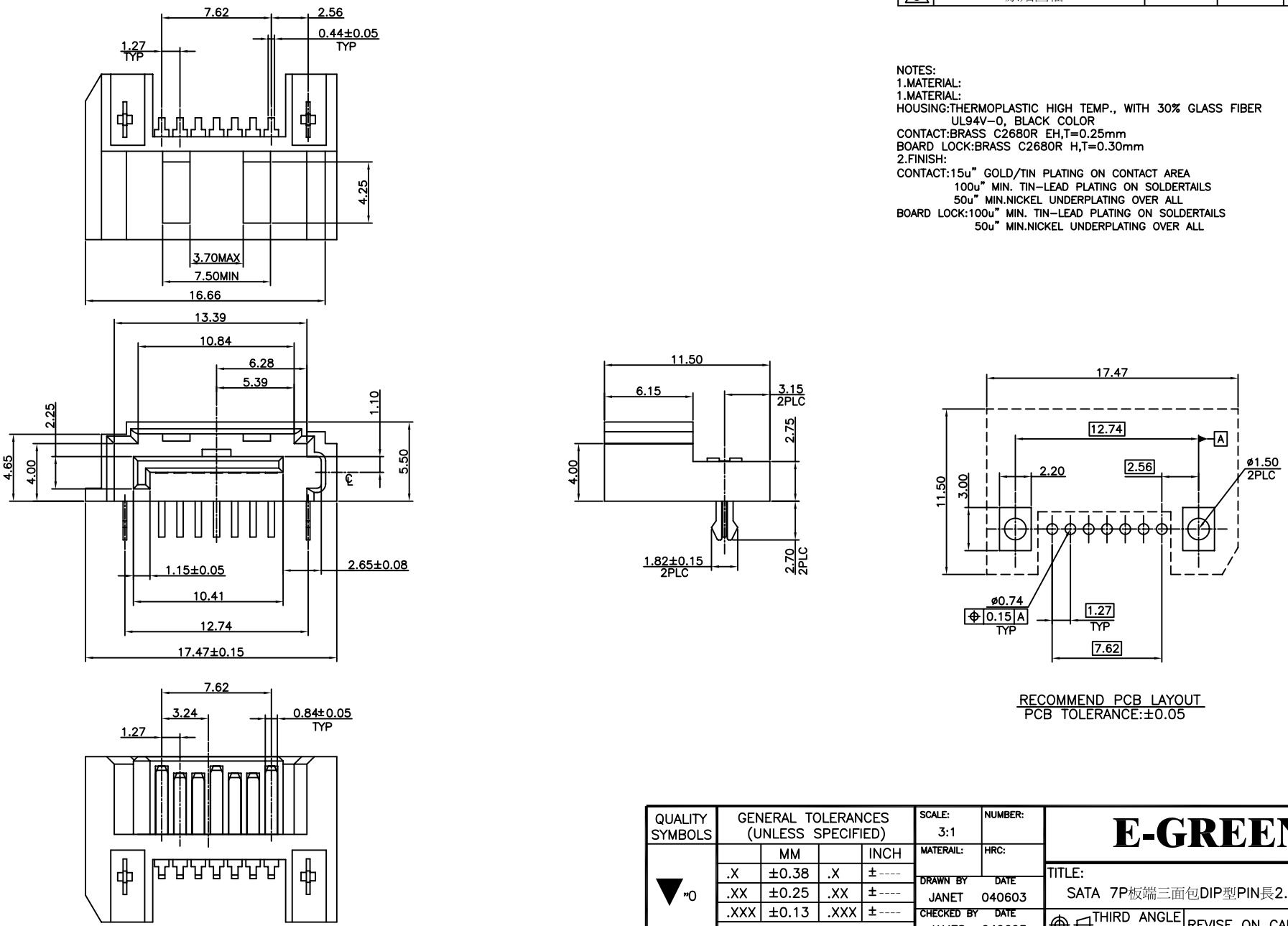

NOTES:
1.MATERIAL:
1.MATERIAL:
HOUSING:THERMOPLASTIC HIGH TEMP., WITH 30% GLASS FIBER
UL94V-0, BLACK COLOR
CONTACT:BRASS C2680R EH,T=0.25mm
BOARD LOCK:BRASS C2680R H,T=0.30mm
2.FINISH:
CONTACT:15u" GOLD/TIN PLATING ON CONTACT AREA
100u" MIN. TIN-LEAD PLATING ON SOLDERTAILS
50u" MIN.NICKEL UNDERPLATING OVER ALL
BOARD LOCK:100u" MIN. TIN-LEAD PLATING ON SOLDERTAILS
50u" MIN.NICKEL UNDERPLATING OVER ALL

RECOMMEND PCB LAYOUT
PCB TOLERANCE:±0.05

QUALITY SYMBOLS	GENERAL TOLERANCES (UNLESS SPECIFIED)			
		MM		INCH
▼ "0	.X	±0.38	.X	±----
	.XX	±0.25	.XX	±----
	.XXX	±0.13	.XXX	±----
	ANGULAR ±3°			
C "0	DRAFT WHERE APPLICABLE MUST REMAIN WITHIN DIMENSIONS			

SCALE: 3:1	NUMBER:
MATERAIL:	HRC:
DRAWN BY JANET	DATE 040603
CHECKED BY JAMES	DATE 040603
APPROVED BY	DATE

E-GREEN

TITLE:
SATA 7P板端三面包DIP型PIN長2.5mm

THIRD ANGLE PROJECTION | REVISE ON CAD ONLY

PART NO.	DWG NO.	SHEET NO.
SA1B07-C5244CA		1/1

Y