REV	DESCRIPTION	APPR	CHECK	DRAW	DATE
0	????		JAEMS	JANET	050404

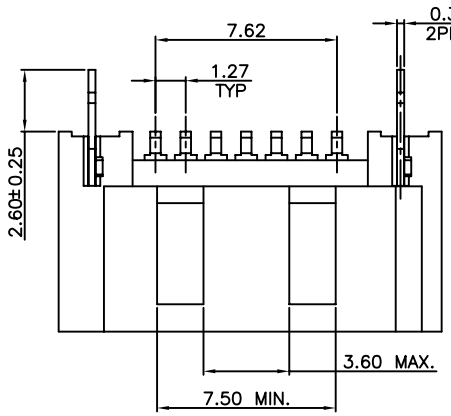

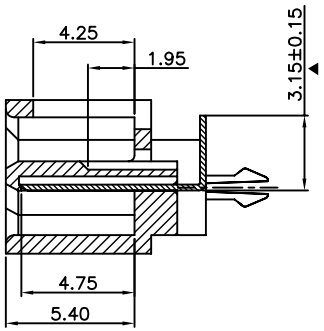

SECTION A–A

NOTES:
1.MATERIAL:
HOUSING:THERMOPLASTIC HIGH TEMP., WITH 30% GLASS FIBER
UL94V–0, BLACK COLOR
CONTACT:BRASS
BOARD LOCK:BRASS
2.FINISH:
CONTACT:15u" GOLD/TIN PLATING ON CONTACT AREA
100u" MIN. TIN PLATING ON SOLDERTAILS
50u" MIN.NICKEL UNDERPLATING OVER ALL
BOARD LOCK:100u" MIN. TIN PLATING ON SOLDERTAILS
50u" MIN.NICKEL UNDERPLATING OVER ALL

Ordering Information

SA 1 C 07 – C X 253 X A

Contact Area Plating
5:15? " Gold/LEAD–FREE(100%)TIN
6:30? " Gold/LEAD–FREE(100%)TIN
7:Gold Flash/LEAD–FREE(100%)TIN
...

Color/Material:
B=Blue/NY 6T
(Color No.:293C)
C=Black/LCP
D=Black/NY6T
...

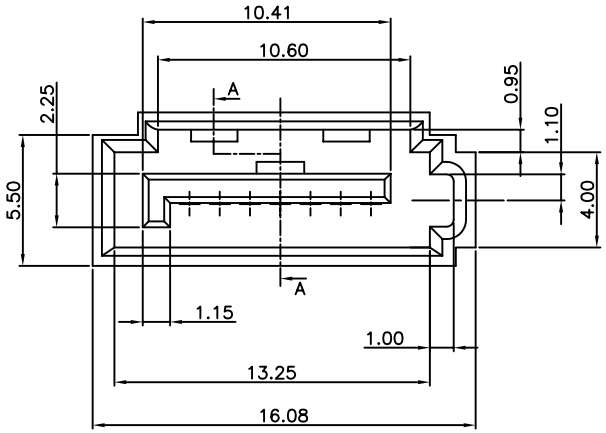

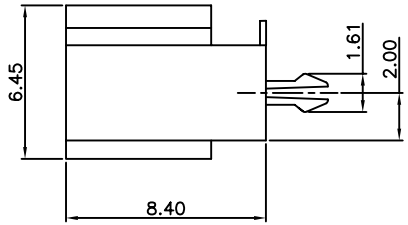

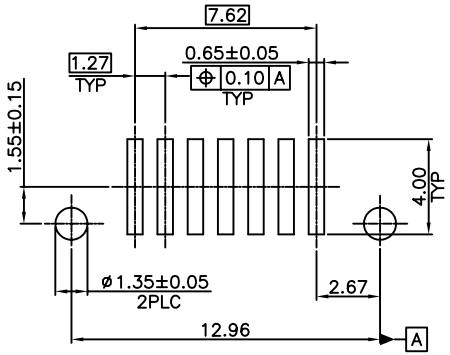

RECOMMEND PCB LAYOUT
PCB TOLERANCE:±0.05

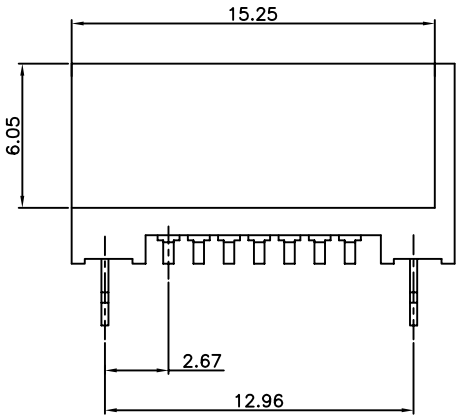

QUALITY SYMBOLS	GENERAL TOLERANCES (UNLESS SPECIFIED)			
		MM		INCH
▼ "0	.X	±0.38	.X	±–––
	.XX	±0.25	.XX	±–––
	.XXX	±0.13	.XXX	±–––
	ANGULAR ±3°			
C "0	DRAFT WHERE APPLICABLE MUST REMAIN WITHIN DIMENSIONS			

SCALE:	NUMBER:	E–GREEN ENTERPRISE CO., LTD.
MATERAIL:	HRC:	TITLE: SATA 7P?? 180? A????? SMT?
DRAWN BY ???	DATE 050404	
CHECKED BY DATE		THIRD ANGLE PROJECTION / REVISE ON CAD ONLY
APPROVED BY DATE		PART NO. SA1C07–CX253XA / DWG NO. SATA–1253C2A / SHEET NO. 1/1
		A4