PART NO.	007-01-00333

REVISIONS			
LTR	DESCRIPTION	Drawing	DATE
A	INITIAL FOR MANUFACTURE REL	BILL	03/23/07'
B	依客戶要求變更尺寸公差 A	BILL	08/09/07'

CUSTOMER DRAWING

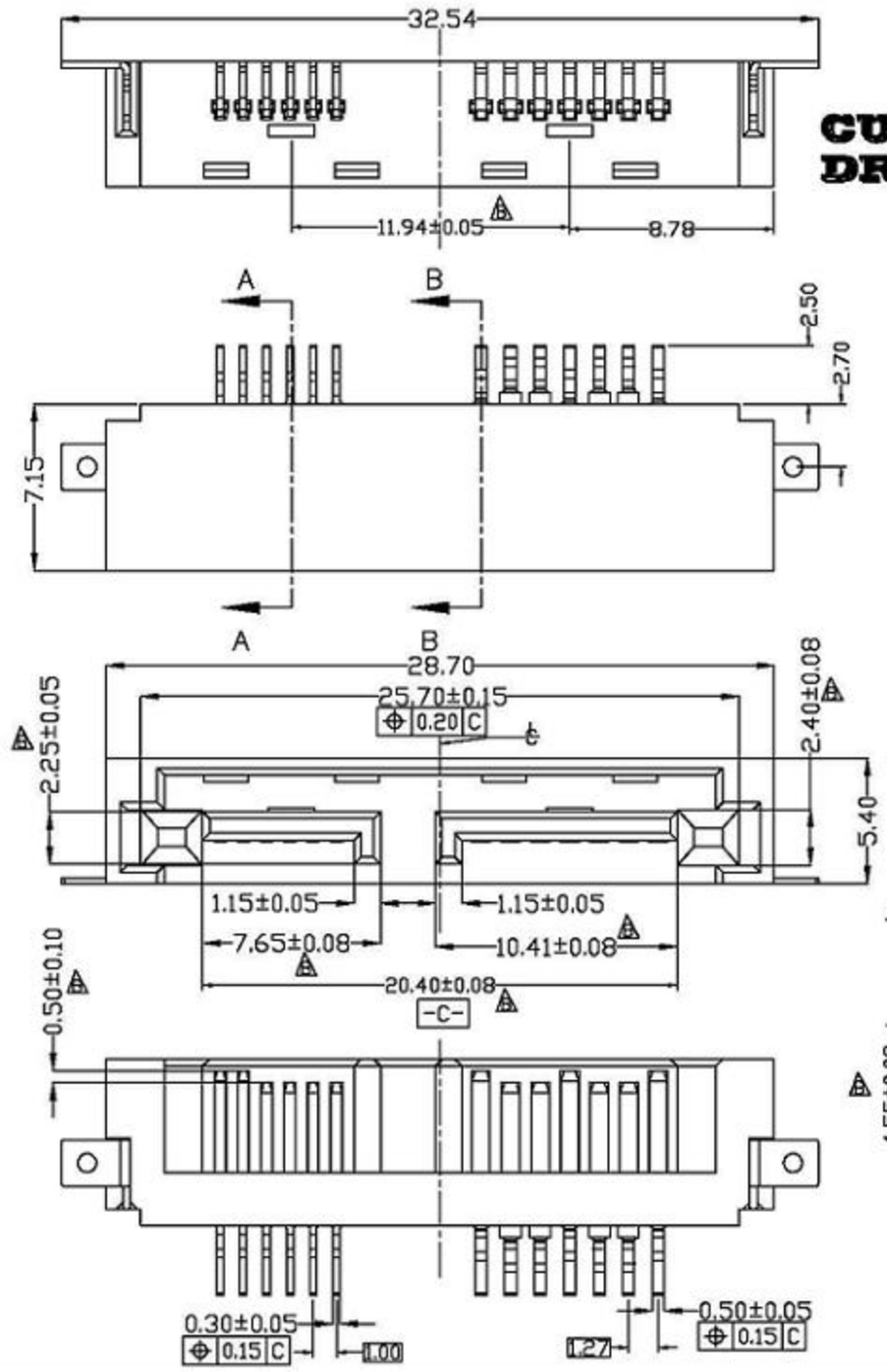

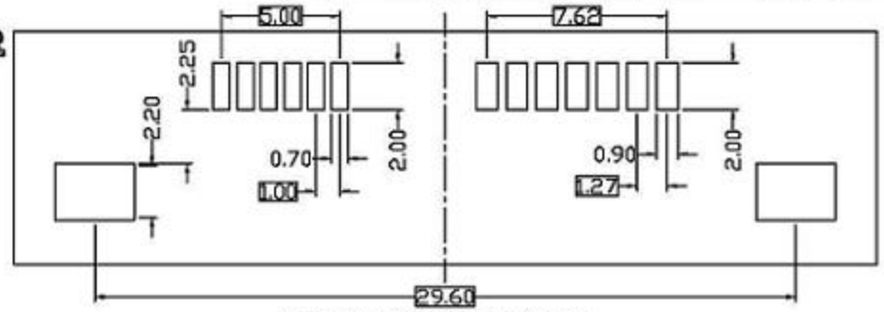

RECOMMENDED PCB LAYOUT

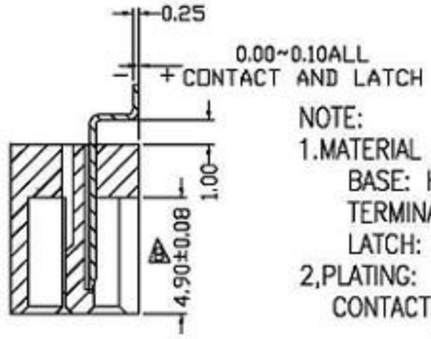

SECTOIN A-A

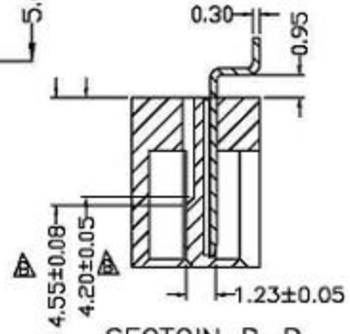

SECTOIN B-B

NOTE:

1.MATERIAL :
- BASE: HIGH THERMOPLASTIC UL94V-0, COLOR : BLACK
- TERMINAL: COPPER ALLOY, T= 0.30&0.25 mm
- LATCH: COPPER ALLOY,T= 0.30 mm

2,PLATING:
- CONTACT:GOLD PLATED ON THE CONTACT.
  TIN PLATED ON THE SOLDER TAIL.
  NICKEL UNDERPLATED OVER ALL.
- LATCH: NICKEL UNDERPLATED OVER ALL AND
  TIN PLATED OVER ALL.

3.ELECTRONICAL SPECIFICATION:
- CURRENT RATING: 1.5 AMPERE PER CONTACT
- CONTACT RESISTANCE: 30 MILLIOHMS MAX.
- INSULATION RESISTANCE: 1000 MEGOHMS MIN.
- DIELECTRIC WITHSTANDING VOLTAGE: 500 VAC.
- OPERATING TEMPERATURE: -40°C~+85°C

4.MEETS THE REQUIREMENTS OF DIRECTIVE 2002/95/EC OF THE EUROPEAN PARLIAMENT AND OF THE COUNCIL OF 27 JANUARY 2003 ON THE RESTRICTION OF THE USE OF CERTAIN HAZARDOUS SUBSTANCES IN ELECTRICAL AND ELECTRONIC EQUIPMENT(ROHS)

NO	DESCRIPTION	Q'TY	UNIT

DIMENSION ARE MILLIMETERS
TOLERANCES ARE :
DECIMALS
.X ± 0.20
.XX ± 0.15
ANGLE:
X ± 1°
DO NOT SCALE DRAWING

APPROVALS		DATE
DRAWN	BILL	08/09/07'
CHECKED		
APPROVALS		

E-GREEN EMTERPRISE CO., LTD.

TITLE: SATA 13P PLUG SMT TYPE

SIZE	SCALE :	DRAWING NO.	REV.
mm	1 : 1	000431	B
ID NO.	XXXXXXXXX	SHEET 1 OF 1	