PART NO.	SEE TABLE

REVISIONS			
LTR	DESCRIPTION	Drawing	DATE
A0	NEW	BILL	09/04/07
A1	變更主體及鐵殼結構	BILL	10/24/07

CUSTOMER DRAWING

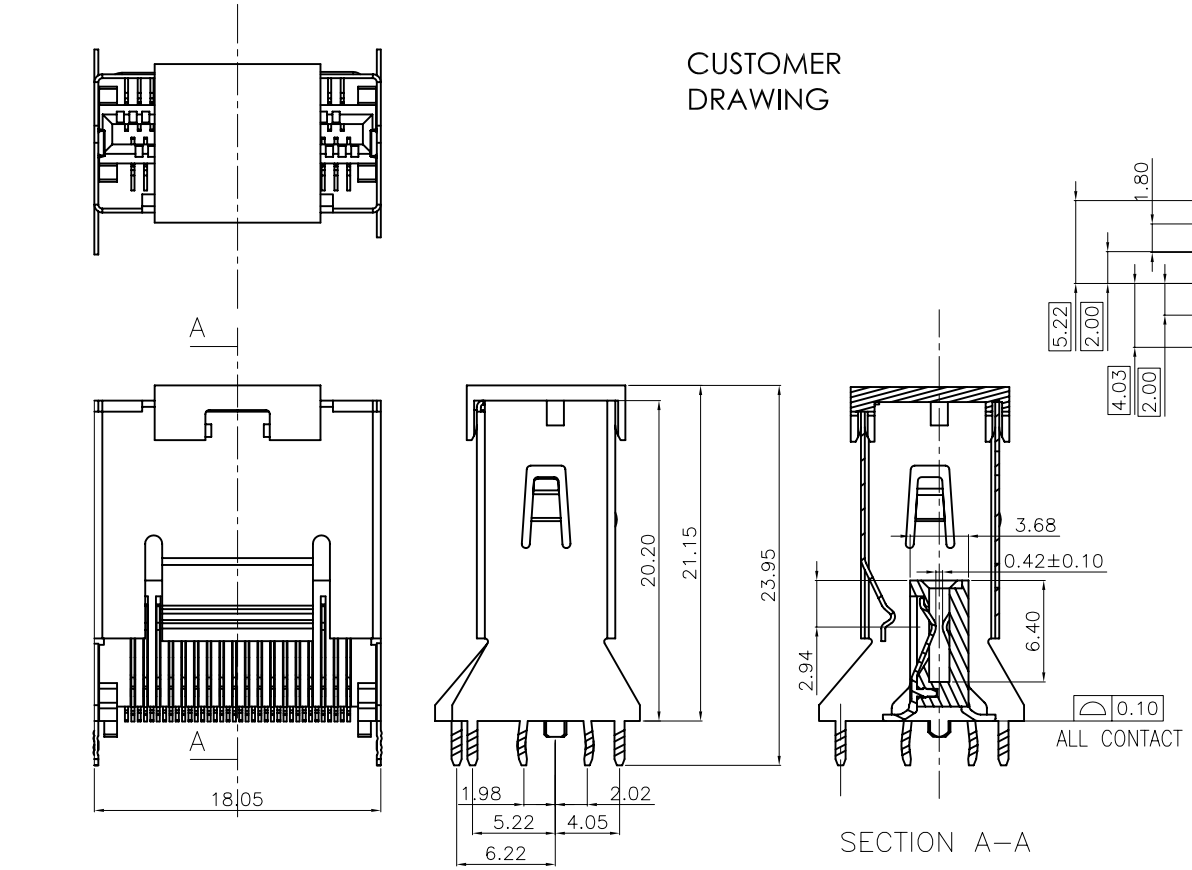

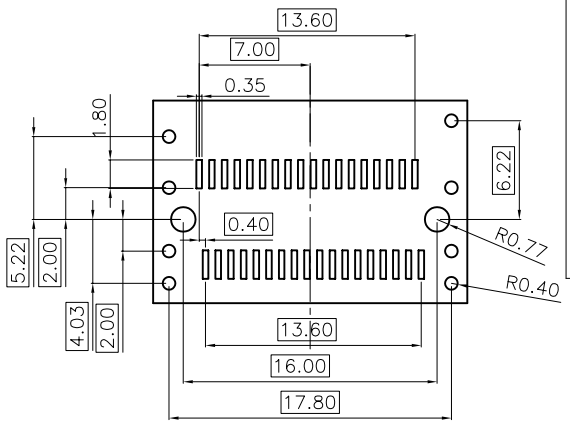

RECOMMENDED PCB LAYOUT

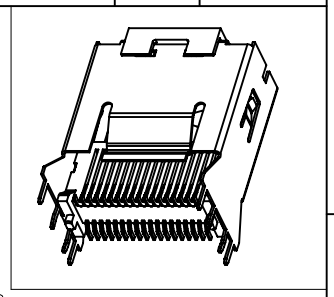

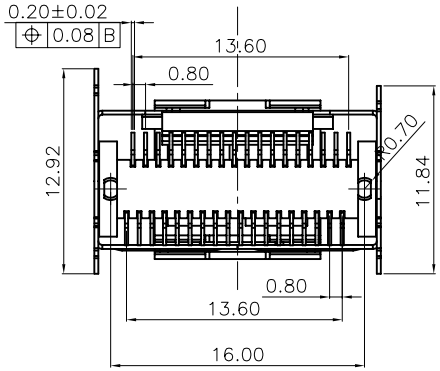

NOTE:

1.MATERIAL :
BASE&COVER: HIGH THERMOPLASTIC UL94V–0, COLOR : BLACK
TERMINAL: COPPER ALLOY, T= 0.20 mm
SHELL: STELL,T= 0.25 mm

2,PLATING:
CONTACT:GOLD PLATED ON THE CONTACT.
TIN PLATED ON THE SOLDER TAIL.
NICKEL UNDERPLATED OVER ALL.
SHELL: NICKEL UNDERPLATED OVER ALL.

3.ELECTRONICAL SPECIFICATION:
CURRENT RATING: 0.5 AMPERE PER CONTACT
CONTACT RESISTANCE: 20 MILLIOHMS MAX.
INSULATION RESISTANCE: 1000 MEGOHMS MIN.
DIELECTRIC WITHSTANDING VOLTAGE: 300 VAC.
OPERATING TEMPERATURE: −25° C~+85° C

4.MEETS THE REQUIREMENTS OF DIRECTIVE 2002/95/EC OF THE EUROPEAN PARLIAMENT AND OF THE COUNCIL OF 27 JANUARY 2003 ON THE RESTRICTION OF THE USE OF CERTAIN HAZARDOUS SUBSTANCES IN ELECTRICAL AND ELECTRONIC EQUIPMENT(ROHS)

TABLE 1

PART NO.	PLATED	PLASTIC&COLOR
020–01–00314	15U"	LCP BLACK
020–01–00322	30 U"	LCP BLACK

NO	DESCRIPTION	Q'TY	UNIT

DIMENSION ARE MILLIMETERS
TOLERANCES ARE : DECIMALS
.X ± 0.20
.XX ± 0.15
ANGLE:
X ± 1°

DO NOT SCALE DRAWING

APPROVALS		DATE
DRAWN	BILL	10/24/07
CHECKED		
APPROVALS		

E-GREEN

TITLE: SAS 36P SOCKET 180° SMT TYPE

SIZE	SCALE :	DRAWING NO.	REV.
mm	1 : 1	000523	A1

ID NO. XXXXXXXXXX SHEET 1 OF 1